Keller

>>> Pyrometer Systems

pyrometer.com

Pyrometer
CellaTEMP PX 1x, 2x, 3x

1102804 | 09/2019

Content

1 General 4
1.1 Information about the manual 4
1.2 Explanation of the symbols 4
1.3 Liability and Warranty 4
1.4 Copyright 5
2 Safety 5
2.1 Intended use 5
2.2 User´s responsibility 5
2.3 Safety requirements 5
2.4 Safety instructions and protective measures 6
2.4.1 Laser radiation 6
2.4.2 Position of the product label 6
3 Shipping, packaging and disposal 7
3.1 Inspection after shipping 7
3.2 Packging 7
3.3 Disposal oft he old devices 7
4 Theory of Non-Contact Temperature Measurements 8
4.1 Advantages of Non-Contact Temperature Mesasurement 8
4.2 Measurements at Black Bodies (Cavity Radiators) 8
4.3 Measurements of Real Radiators 9
4.4 Measurements errors 9
5 Ways to determine emissivity 10
6 Function 10
7 Installation 10
7.1 Assembly 10
7.2 Aiming the pyrometer 11
7.3 Focussing 11
8 Electrical connection 13
9 Setup 14
10 Shielding and Grounding 15
11 Operating control and display 16
11.1 Processing of measuring signals 17
11.2 Analogue output 17
11.3 Switching threshold OUT 1 18
11.4 Output signal 18
11.5 Switch on delay 18

11.6 Switch off delay 18
11.7 Hysteresis function 19
11.8 Window function 20
11.9 Switching output OUT 2 21
11.10 Damping function 21
11.11 Peak hold function 22
11.12 ATD function 22
11.13 IO-Link 26
12 Menu 26
12.1 Analogouge output Ao 26
12.2 Switching output OUT 1 27
12.3 Switching output OUT 2 28
12.4 Spectral channel 29
12.5 Advanced Features 30
13 Menu explanation 31
13.1 Analogue output 31
13.2 OUT 1 (d1) + OUT 2 31
13.3 OUT 2 (d2) 32
13.4 Spectral channel (S) 32
13.5 Advanced Features (EF) 35
14 Parameterizing 36
14.1 Setting parameters – general information 36
15 Error indications 37
16 Service functions 38
16.1 Reset all parameters to factory settings 38
16.2 Simulate a desired temperature 38
17 Maintenace 39
17.1 Cleaning the pyrometer lens 39
17.2 Replacing the protective screen 39
18 Models 40
19 Field of view 41
20 General technical data 42
21 Device-specific technical data 44
22 Field of view camera 55
23 Accessories 57
24 Default settings 57
25 Copyright 57

EN

1 General

1.1 Information about the manual

The purpose of the Operating Manual is to provide the user with all necessary information to be able to install the pyrometer and any necessary accessories. Before starting installation, be sure to read and understand this entire manual, in particular the chapter on safety! The instructions contained in this manual, especially those concerning safety, as well as site specific regulations governing UV radiation must be complied with at all times. It is imperative to comply with the safety instructions and the accident protection regulations valid for the area of application!

1.2 Explanation of the symbols

Important safety-related references in this manual are marked with a symbol.

⚠ ATTENTION

This symbol points out guidelines. If you do not observe them, the device might be damaged, malfunctioning or even fail to operate.

CAUTION
This symbol points out guidelines which should be followed for efficient and trouble-free operation.

▶ Action
This symbol instructs the operator to take action.

> Reaction, result
This symbol indicates the result of the action taken.

1.3 Liability and Warranty

All information compiled in this manual is in accordance with applicable regulations. The statements made are based on state-of-the-art technology and reflect our extensive knowledge and many years of experience.

Always carefully read this Operating Manual before beginning any work on or with the instrument, especially prior to installation and initial setup! The Manufacturer shall not be held liable for any damages or malfunctions arising from a disregard of the warnings and instructions contained herein.

1.4 Copyright

This Operating Manual should be treated as confidential. It is solely intended for the use by persons involved with the instrument. This manual may not be made available to a third party without prior Manufacturer's consent. Please contact the Manufacturer if the need should arise.

2 Safety

This chapter outlines all important safety aspects to be considered for optimum employee protection and to ensure safe and reliable operations.

2.1 Intended use

The pyrometer is solely intended for use as described in this manual. Operational safety can only be ensured when the instrument is used for its intended purpose.

The use of the pyrometer for any other purpose beyond what is specified in this manual is prohibited. Using the instrument in any other manner will be considered as improper.

The manufacturer is only liable for damage that occurs during correct use. The prerequisite for any liability, however, is that the cause of the damage is due to a defective product and the defect in the product was caused by the manufacturer.

2.2 User´s responsibility

The pyrometer may only be used when it is in perfect working condition.

2.3 Safety requirements

- Read this document before using the device.
- Ensure that the product is fully suitable for the relevant applications.
- Do not try to open the module enclosure. There are no users-serviceable components inside.
- Do not use and disable the product if it is damaged.
- Do not use the product if it operates incorrectly.

2.4 Safety instructions and protective measures

2.4.1 Laser radiation

⚠ ATTENTION

Laser class II product, according to IEC 60825-1:2014

- Do not stare into the laser beam.
- Only switch on the laser to align the pyrometer and then switch it off again.
- Do not leave the device unattended when the laser is activated.
- Do not point the device's laser beam at people.
- When installing and aligning the pyrometer, avoid reflections of the laser beams from reflective surfaces.
- Do not look directly into the laser with optical tools (for example, bin-oculars, telescopes, microscopes).
- Observe the latest version of the applicable laser safety regulations.

2.4.2 Position of the product label

Wavelength: 630 - 680 nm
Power: < 1 mW
The arrow on the laser warning sign points in the direction of the laser's exit lens.

If the pyrometer is installed in such a way that the laser warning sign is covered, the enclosed laser warning sign (1 piece) must be attached to the mounting or machine next to the laser beam exit opening (so that the laser is not visible when reading the sign).

3 Shipping, packaging and disposal

3.1 Inspection after shipping

Unpack and inspect the entire shipment immediately upon receipt to make sure it is complete and undamaged. If the container/package shows visible signs of damage, please refuse the shipment. If this is not possible, accept the shipment on the condition that the freight carrier's delivery record is noted with the extent of the damage in order to file a claim. Should you discover a concealed loss or damage, report it to the shipper or freight carrier immediately. If the period for filing claims has expired, you will no longer be able to make any claims for compensation of damage or loss.

3.2 Packging

The packages used are made of carefully selected, environmentally compatible materials and are thus recyclable. Please ensure that they are disposed of in an ecologically sound manner.

3.3 Disposal oft he old devices

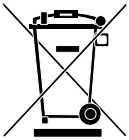

Old electrical and electronic devices frequently still contain valuable materials. These devices can be returned for disposal to the manufacturer or they must be disposed properly by the user.

For the improper disposal of the device by the user, the company KELLER HCW is not responsible.

4 Theory of Non-Contact Temperature Measurements

All materials radiate thermal energy in all states of aggregation above absolute zero. This radiation is mainly caused by atomic or molecular oscillations.

This temperature radiation is only a limited sector within the total electromagnetic radiation spectrum. It extends from the visible range starting at wavelengths of approx. 0.5 µm to the infrared range with wavelenghs of more than 40 µm. Radiation pyrometers detect infrared radiation for non-contact temperature measurement.

4.1 Advantages of Non-Contact Temperature Mesasurement

- Non-contact temperature detection means cost-effective temperature measurement because this technique only requires a single in-vestment in an instrument without any follow-up costs for consumables such as thermocouples
- This method enables temperature detection of moving objects - quick temperature measurements within milliseconds - for example at automatic welding processes
- Small objects with medium and high temperatures can also be easily and accurately measured
- When measuring materials with low specific heat, a non-contact method does not induce heat loss which would distort the temperature reading (as is the case with contact temperature probes). Non-contact temperature detection is ideal with corrosive molten materials for which the use of thermocouples is hardly feasible
- Last but not least it is also possible to measure the temperature of voltage-carrying objects.

4.2 Measurements at Black Bodies (Cavity Radiators)

A black body or a black radiator is used to calibrate radiation pyrometers. This black body is designed in a way that its radiation does not depend on material characteristics, but only on its temperature. A black body emits at any wavelength the maximum energy possible for the specific temperature. Real bodies do not have this ability. In other words, a black body completely absorbs the radiation without reflection or transmission losses. The spectral emissivity coefficient $\varepsilon(\lambda)$ of a black body is equal to 1 or 100 %.

The emissivity coefficient indicates the ratio of radiation of a real body (target) to the radiation of an ideal black body (target) to the radiation of an ideal black body.

$$\varepsilon(\lambda) = \frac{M}{M_s}$$

ε(λ): Emissivity coefficient of the object's surface (targeted spot) at wavelengh λ

M: Emissivity coefficient of the object's surface (targeted spot) at wavelength

MS: radiant energy emitted by a black body (perfect radiator)

Most burning, annealing and hardening furnaces emit a radiation of nearly ‚1' which corresponds to the conditions of a black body if the aperture through which the measurement is made is relatively small.

4.3 Measurements of Real Radiators

Real radiation sources are characterized by the relation of the emitted radiation to the radiation of a black body with the same temperature. Measurements outside a furnace - which applies to all other self-contained targets - always show a reading which is too low. Considerable errors can occur at targets with reflecting, polished or bright surfaces, e.g. molten steel and metal without oxide layer and ceramic materials. Exact results can only be obtained when the emissivity coefficient is correctly adjusted on the pyrometer. The spectral emissivity coefficient of a body does not represent an exact material constant, but is also largely dependent on the surface properties (→ Ways to determine emissivity).

4.4 Measurements errors

The cause of measurement errors in the use of pyrometers is often an incorrectly determined or wrong emissivity. Another source of error is the reflected „background radiation". If the measurement object has a low emissivity and there are hotter objects in the surrounding area, measurement results can be affected. These objects then have to be shaded. This effect is particularly to be observed in the measurement of a colder object within a hot oven.

5 Ways to determine emissivity

Technical literature or operating manuals often contain data on the emissivity of various materials. This information should be used with caution, however. It is important to know for which temperature and which wavelength the emissivity value is applicable. Furthermore, the stated emissivity values were obtained under ideal conditions. In actual practice, the total emissivity of the target object will vary, depending on the amount of extraneous radiation transmitted through the object from the background or reflected onto the object from the foreground. The emissivity can be determined using one of the following methods:

Contact measurements

Measure the temperature with a contact thermocouple and measure the surface temperature with a pyrometer. Adjust the emissivity coefficient on the pyrometer until both devices show the same temperature. When measuring with the thermocouple, make sure to have good thermal contact and low heat dissipation.

Using a reference emissivity coefficient

Apply matte black colour to a part of the surface to be measured. This part has an emissivity of 94 %. At first, measure the temperature of the coloured part. Then make a comparative measurement right next to the coloured part and adjust the emissivity on the pyrometer until it displays the previous measurement reading again.

6 Function

The pyrometer detects the radiated infrared radiation of objects without contact and converts them into an electrical switching signal and an analogue output signal.

7 Installation

7.1 Assembly

The pyrometer should be mounted where it is not unnecessarily exposed to smoke, heat or water vapour.

Contamination of the lens can lead to measurement errors. Therefore, always make sure that the lens is clean.

The pyrometer´s field of view must remain unobstructed. Any interference from objects must be avoided.

⚠ ATTENTION

At an ambient temperature > 65 °C, the pyrometer must be cooled or protected against radiation by a shielding plate.

7.2 Aiming the pyrometer

Point the pyrometer at the object to be measured. If possible, the pyrometer should be installed at an angle of 90° to the object to be measured. The angle should not be less than 45° from the vertical. The spot must be completely filled by the measured object.

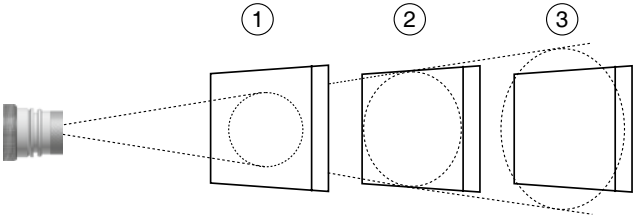

1	Best- Target larger than the spot size
2	Good- Target equal to spot size
3	Incorrect- Target smaller than spot size

7.3 Focussing

For correct temperature measurement, it is important that the pyrometer is correctly focused on the target to be measured.

Pyrometer with through-lens sighting

When aiming the pyrometer with through-the-lens sighting to a target, both the targeted object and the target marker (distinctly marked circled spot in the viewfinder) must appear in sharp focus simultaneously. The measured object must completely fill the target circle in the viewfinder.

Pyrometer with camera

The pyrometer models Typs PX xx AF xx /C features an integrated camera.

The video relieved the optical alignment of the pyrometer and allows a continuous observation of the measuring point.

To measure, the pyrometer must be aligned and focused so that the video image is sharp (see chapter “Technical Data”). The measuring field marking (inner edge) must be completely filled in by the measuring object.

Pyrometer with laser sighting

The pyrometer models PX xx AF xx /L feature a laser spot light which can be activated to facilitate instrument alignment to the target spot.

To activate the laser, press the MODE button on the rear panel for 2 seconds

For measuring, the pyrometer must be aligned and focused so that the pilot light is shown as sharp and round light spot at the measuring distance.

Information on the laser output can be found in chapter 2.4

To protect the laser against overload, an overtemperature circuit is provided. At temperatures above 60 °C, the laser switches off and can no longer be activated. To check, whether the laser is activated, the parameter LED lights up.

In normal operation of the pyrometer, the laser is switched off. After activation, the laser switches off again after 2 minutes. The operator must be familiar with the pyrometer and the above safety guidelines.

The switched-on laser pilot light can have an influence on the measured temperature. The influence depends on the type of device and the measured temperature.

8 Electrical connection

⚠ ATTENTION

- The pyrometer may only be installed by a skilled, qualified electrician. Do not connect the instrument while the voltage supply source is turned on. Please observe international safety regulations at all times.
- The pyrometer is supplied with low voltage 24V DC. The power supply unit must conform to directive EN50178, SELV, PELV.

EN

► Switch to neutral and verify absence of voltage

► Connect the instrument according to the following schematic:

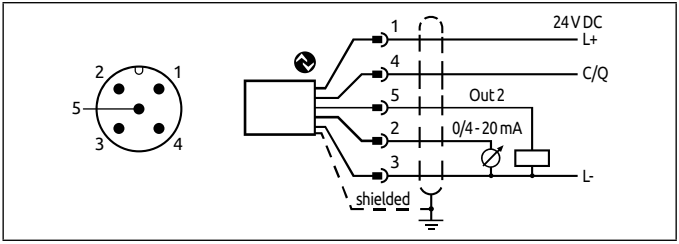

Pin 1	BN (brown)	L+ (Power supply 24V DC)
Pin 4	BK (black)	Open Collector switching output; Imax = 150 mA or IO-Link OUT 1
Pin 5	GY (grey)	Open Collector switching output; Imax = 150 mA OUT2
Pin 2	WH (white)	Analogue output; 0/4 - 20mA
Pin 3	BU (blue)	L- (GND)

The pyrometer must be protected against high voltage and strong electromagnetic fields. Use a shielded cable, connecting it via connector casing to the device housing.

Use a flyback diode when switching inductive loads.

9 Setup

For non-contact temperature measurement, the pyrometer uses the intensity of the infrared radiation. In order to obtain accurate measurement results, the respective emissivity of the measurement object must be set on the pyrometer (→ emissivity determination).

An incorrectly set emissivity leads to measurement errors during temperature measurement. After the supply voltage has been switched on for the first time, the emissivity must first be set. The emissivity is set as follows:

► Press [∧ or ∨]

> The value of the selected emissivity is displayed, for example [1000]

► Press [∧ or ∨] until the desired emissivity will show

► Press [Enter] or wait for 3 seconds

> The current temperature value is displayed and the new emissivity coefficient is stored.

To compensate for environmental influences, it may be useful to have an emissivity of > 100 %. A setting of 110 % is possible.

⚠ ATTENTION

An incorrectly set emissivity coefficient leads to wrong temperature readings.

10 Shielding and Grounding

The pyrometer housing is connected to the shielding via the cable connector!

Differences in ground potentials might cause an equalising current to flow between devices through a cable shielded at both ends. In this case, be sure to install an additional equipotential bonding line.

To avoid an equalising current, the pyrometer can be mounted electrically insulated. The shielding must be connected to the plant's earthing system.

⚠ ATTENTION

If the pyrometer is installed without an insulator and without potential equalisation, the interference voltage may not exceed 32V.

11 Operating control and display

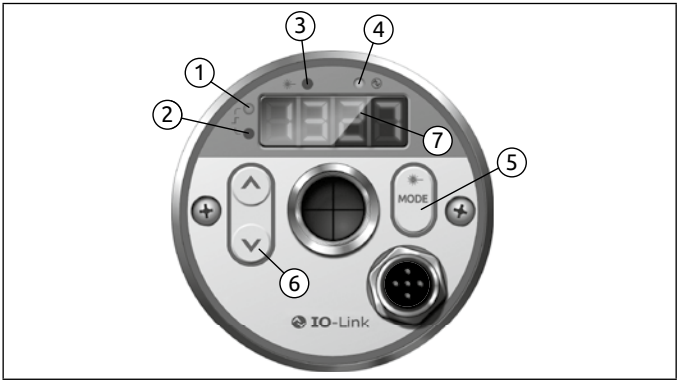

1 to 4: Indicator-LEDs
LED 1 = Switching state of switching output OUT1 LED 2 = Switching state of switching output OUT2 LED 3 = Laser pilot light active LED 4 = IO-Link Communication
5: Control key [MODE]
• Selection of parameters • Reading the set values • Confirmation of parameter values
6: Control key [∧] and [∨]
• Selection of parameters • Activation of emissivity quick adjustment • Confirmation of parameter values
7: Alphanumeric display, 4-digit
• Indicates temperature value • Indicates parameter and configuration • Display of errors

11.1 Processing of measuring signals

The pyrometer disposes of an IO-Link interface.
The generated three output signals correspond to the parameterization:

- Out 1: Switching output/ IO-Link
  - Switch signal: threshold value temperature / status signal
- Out 2: Switching output
  - Switch signal: threshold for temperature / status signal
- Analogue output: 0/4 -20 mA
  - Analogue output for temperature

11.2 Analogue output

The pyrometer converts the measuring signal into a temperature proportional analogue signal of 0/4 – 20 mA. The maximum load is 500 Ohm.

[AoFn] Changeover 0 -20 mA or 4 -20 mA

[AoSP] defines at which measured value the output signal is 0/4 mA.

[AoEP] defines at which measured value the output signal is 20 mA.

Maximum measuring range	Measuring range scaled
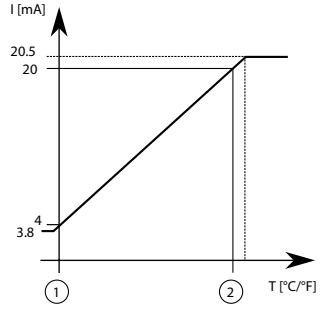	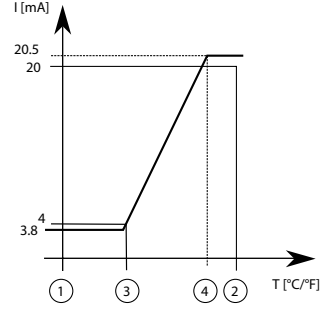

1	initial value of the measuring range	3	Analogue start point
2	final value of the measuring range	4	Analogue end point

11.3 Switching threshold OUT 1

OUT1 changes its switching status when the configured upper or lower thersholds [d 1.SP, d 1.rP] are exceeded. Source d 1.S specifies the signal that is output at OUT1.

- Spectral channel [d1] → [d1.S] = L 1

First, the switching point [d 1.SP] is set in °C and °F and then the reset point [d 1.rP]. When changing [d 1.SP], the [d 1.rP] also changes so that the difference remains the same. If the [d 1.SP] is reduced to such an extent that the distance can no longer be maintained (as the [d 1.rP] would otherwise move below its minimum), the [d 1.rP] is increased to its minimum. If [d 1.SP] is subsequently increased again, [d 1.rP] is also increased again immediately. The minimum distance between [d 1.SP] and [d 1.rP] is 1 K.

11.4 Output signal

The following output functions can be selected:

- Normally open contact [d 1] → [d 1.Fn] = hno hysteresis function, normally open or rather Fno window function, normally open
- Normally closed contact [d 1] → [d 1.Fn] = hnc hysteresis function, normally closed or rather Fnc windows function, normally closed

11.5 Switch on delay

Once the sensor has detected a temperature which exceeds the switching threshold [d 1.SP] the time delay [d 1.dS] starts running. When this delay period has elapsed, the output OUT 1 activates switching. This status is sustained until the lower threshold [d 1.rP] is violated. If this occurs before the time delay has elapsed, the delay will reset. This function can be used, for example, to supress spurious impulse signals at the output.

- Switching on delay: [d 1] → [d 1.dS] = 0...10 sec.

11.6 Switch off delay

To make sure the output is correctly identified, e.g. by downstream control system, the output can be lengthened.

- Switch off delay: [d 1] → [d 1.dr] = 0...10 sec.

11.7 Hysteresis function

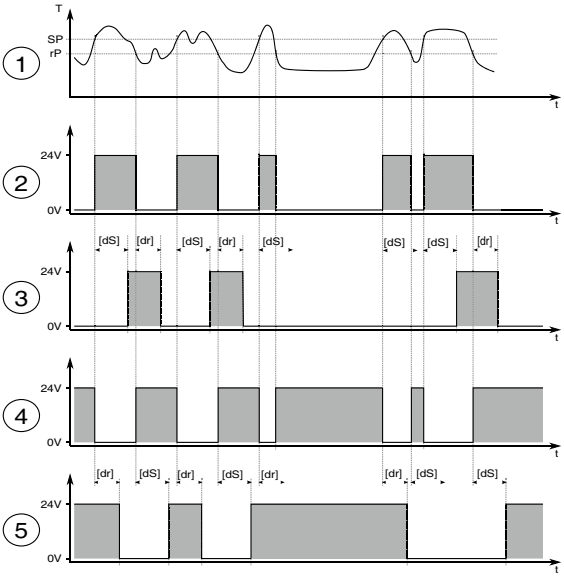

T = temperature
t = time
SP = set point
rP = reset point
dS = switch on delay
dA = switch off delay

1	Temperature
2	Switch signal hno
3	Switch signal hno with switch on delay and switch off delay
4	Switch signal hnc
5	Switch signal hnc with switch on delay and switch off delay

11.8 Window function

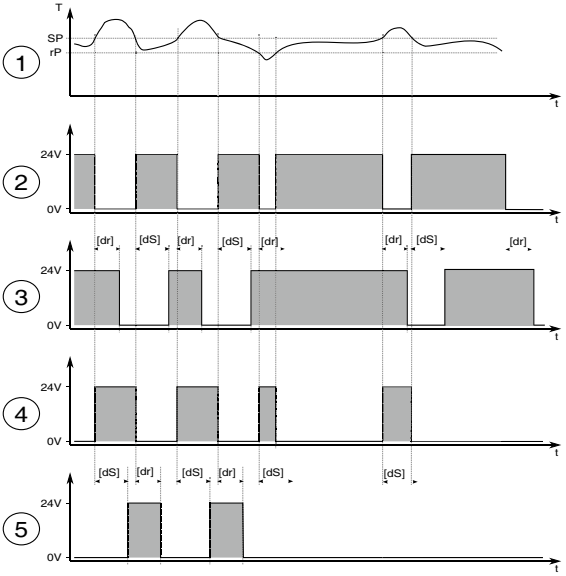

T = temperature
t = time
SP = upper limit value
rP = lower limit value
dS = switch on delay
dA = switch off delay

1	Temperature
2	Switch signal Fno
3	Switch signal Fno with switch on delay and switch off delay
4	Switch signal Fnc
5	Switch signal Fnc with switch on delay and switch off delay

The switching thresholds of the window function have a hysteresis of 0.25% of the measuring range.

11.9 Switching output OUT 2

OUT2 changes its switching state according to the adjusted function. The functions and parameters are the same as OUT 1.

11.10 Damping function

When the target object's temperature is erratic, the damping function smoothens these temperature fluctuations in order to stabilize the measuring signal. The greater the time constant [S] → [SF t], the lower the effect of fluctuations on the yielded temperature reading.

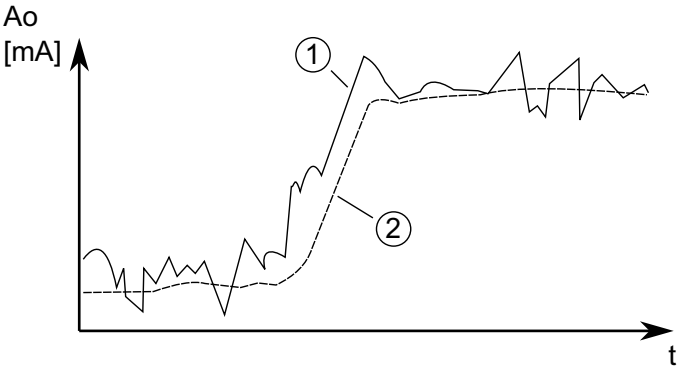

1	Output signal without smoothing function
2	Output signal with smoothing function

11.11 Peak hold function

It might often be desirable to determine the peak temperature during a defined time period, for example when the objects to be measured move past the pyrometer, resulting in temperature readings which would appear to be cyclical. In this mode, the displayed temperature reading will not drop between targeted objects. The peak temperature reading will be held for a preset time period.

The hold time [S] → [S.Phd] → [t i ME] can be set from 0.1 to 999.9 sec. The maximum temperatures sampled during the defined hold time will be saved. It make sense to choose a hold time which is approximate 1.5 time as long as cycle of the moving targets. This avoids temperature drops. Any changes are recognised at once.

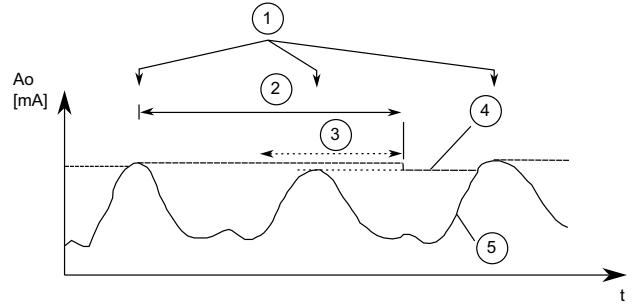

1	Measuring object in front of the pyrometer
2	Hold time
3	Second internal hold time
4	Measuring reading with peak hold function
5	Measuring reading without peak hold function

11.12 ATD function

This function is used to automatically measure the temperature of a discontinuously running process. For example, it can be used to determine the temperature of objects passing the pyrometer acyclically and have a variable size or speed.

The start of a measuring cycle is determined automatically and is dependent on the following variables:

Limit 1 (L1.1)	Before beginning the measurement, the temperature reading must have been lower than Limit 1 at least once. If Autoreset [tAUt = on] the limit 1 will be ignored
Limit 2 (L1.2)	Limit 2 must be exceeded at least fort he duration of **time delay** [tdEL].
Time delay (tdEL):	See above

When the conditions are fulfilled, the sampling time can begin. [tAct].

Sampling time (tACt)	During the sampling time the temperature is detected and stored as a temperature value.

If the parameter tACt = 0, the end of the discontinuous process is also detected automatically (measured temperature < L2). The device then displays 'AUto' instead of the time for the parameter tAct.

The parameter tAMO defines the temperature emitted during the measuring time.

Display mode (tAmo)	„oFF“ displays the lower temperature range limit during the measurement. „hoLd“ indicates the previous temperature reading during the current measurement.

The duration of the measurement time can optionally be signaled at switching output 1 or switching output 2.

When the sampling time has ended, an average value is calculated for recorded measuring cycles. The temperature reading is weighted with the previously saved average value and added.

Weighted average (tFPr)	Factor for average weighting. If you choose 100%, averaging will be off.

The smaller you set the tFPr factor, the stronger the weighting will be.

When the averaging function is activated (tFPr <100%) a plausibility check

will be performed. The difference in temperature between the current reading and the previously stored average is established. If the difference is higher than the plausibility threshold TSP, the transmitted data will be „0“ and the average value will remain unchanged.

Plausibility (tFAL)	Threshold for plausibility check: lower limit which is acceptable for a valid measurement.
Plausibility (tr1S)	Threshold for plausibility check: upper limit which is acceptable for a valid measurement.

When sampling is completed, the average temperature value or „0“ will be output. At the same time, the switching outputs can be parameterized so that a status pulse is generated at the end of the measuring time. Enter AQtr as source and set the holt time to 0.5 sec.

A cut-off interval (time lag) begins after the sampling time has ended. This cut-off interval must expire before the next measurement can start with the cycle starting conditions described above.

Cut-off interval (tdiS)	The interval between one completed sampling and the start of a new sampling.

If a measuring cycle does not start during the period tOUt , the saved average will be deleted and reinitialized when the next cycle begins.

Timeout (tOUt)	Timeout für Mittelfunktion (in Minuten)

Activate auto reset for the ATD function to run cyclically. Limit 1 will then be ignored. Measurement continues when the Limit 2 is exceeded for the period configured with tdEL .

Auto reset (tAUt)	Auto reset on/off

11.13 The parameter Set Li2 checks on tACt checks, whether the value falls below threshold 2 during the measuring time. If the value falls below the threshold, the measurement is rejected. The display shows „– – – –“.

Set Li2 check on tAct (tL2)	on/off

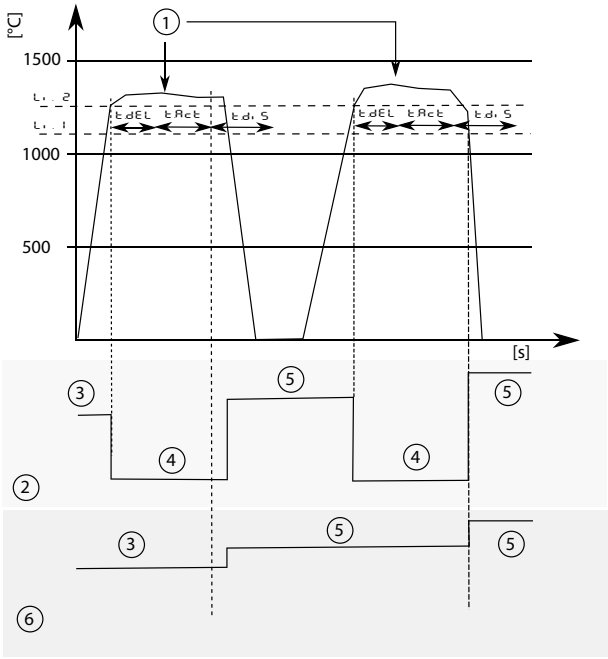

EN

L. 2 = limit 2
L. 1 = limit 1

tdEL = time delay
tAct = sampling time
td. S = cut-off interval

1	Measuring object in front of the pyrometer
2	Temperature output tAno = oFF
3	Previous reading
4	Lower limit of temperature range
5	New reading
6	Temperature output tAno = hoLd

11.14 IO-Link

This device has an IO-Link communication interface, which requires an IO-Link-capable module (IO-Link master) for operation. The IO-Link interface allows direct access to process and diagnostic data and offers the possibility to parameterize the device during operation. The IODDs required for configuring the IO-Link device as well as detailed information on process data set-up, diagnostic functions and parameter addresses are available in the download area at www.pyrometer.com

For IO-Link operation a 3-wire cable port Class A (Type A) must be used.

12 Menu

12.1 Analogue output Ao

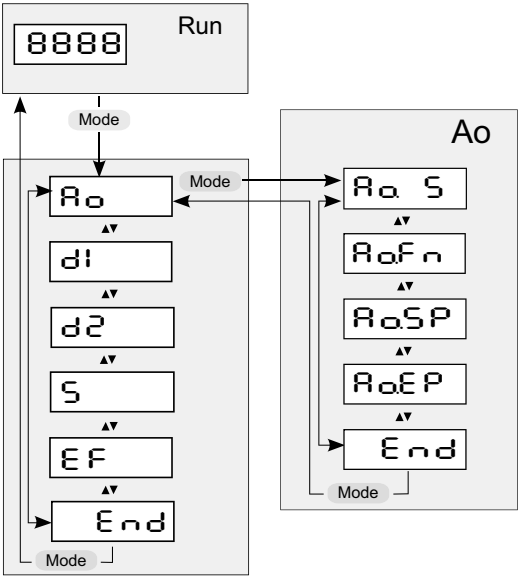

12.2 Switching output OUT 1

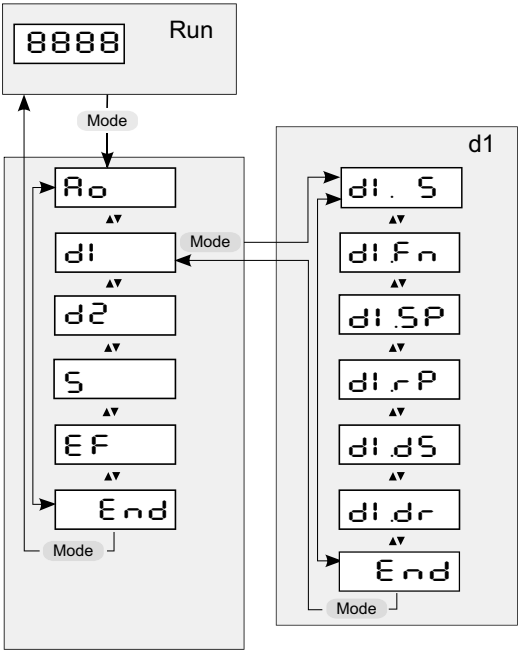

12.3 Switching output OUT 2

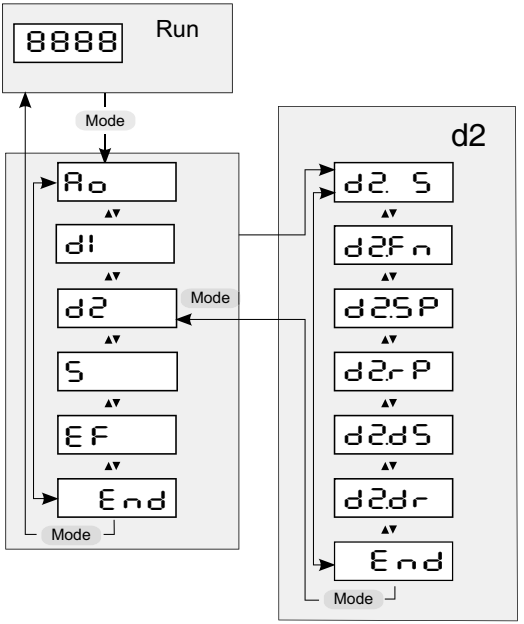

12.4 Spectral channel

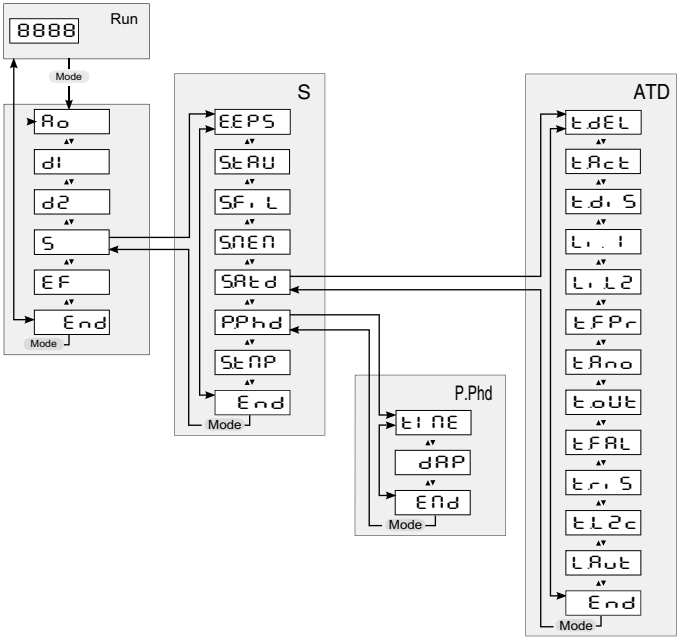

P.Phd	Peak Hold Function Submenu only available when Peak hold function is active
ATD	ADT Function Submenu only available when ATD function is active

12.5 Advanced Features

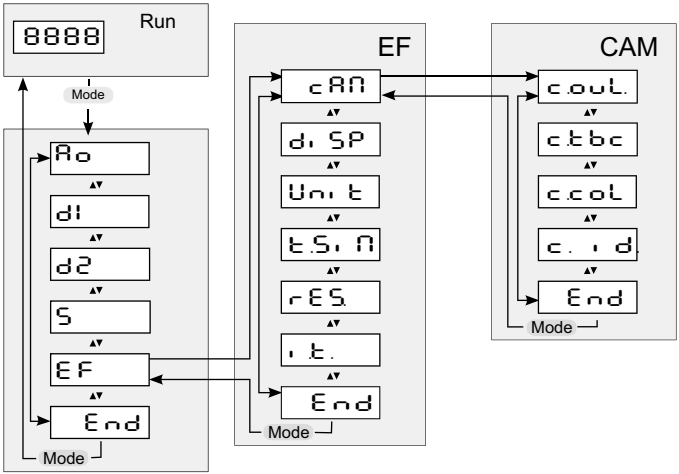

CAM	Parameter and submenu only available at pyrometer with camera.

13 Menu explanation

13.1 Analogue output

Parameter	Funcktion	Comments
Ao. S	Select source	L1 Lambda 1
AoFn	0/4 – 20 mA	0 – 20 mA 4 -20 mA
AoSP	Scaling start	
AoEP	Scaling end	
End	End	Exit menu

13.2 OUT 1 (d1)

Parameter	Funcktion	Comments
d1. S	Select source	L1 Lambda 1 tU Innentemperatur > ca. 70 ° C* ALIA ATD Trigger* ALIt ATD Tact*
d1.Fn	output function	hno Hysterese normally open hnc Hysterese normally closed Fnc Fenster normally closed Fno Fenster normally open
d1.SP	Lower threshold	
d1.rP	Upper thereshold	
d1.dS	Switch on delay	Value in sec (≤ 10 sec in steps of 0.1)
d1.dr	Switch off delay	Value in sec (≤ 10 sec in steps of 0.1)
End	End	Exit menu

* The source is a pure switching signal without the possibility of defining a switching threshold (switch-on/switch-off point).

13.3 OUT 2 (d2)

Parameter	Function	Comments
d2.S	Select source	L1 Lambda 1 tU Internal device temperature ALIA ATD Trigger ALIt ATD Tact
d2Fn	Output function	hno hysterese function normally open hnc hysterese function normally closed Fnc window function normally open Fno window function normally closed
d2SP	Lower threshold	
d2rP	Upper thereshold	
d2dS	Switch on delay	Value in sec (≤ 10 sec in steps of 0.1)
d2dr	Switch off delay	Value in sec (≤ 10 sec in steps of 0.1)
End	End	Exit menu

13.4 Spectral channel (S)

Parameter	Function	Comments
EPS	Emissivity	Correction of the radiation properties of the measured object (10...110%)
StAU	Transmission factor	When using protection shields, the value of the transmission of the used disk can be entered here.
SFIL	Smoothing time	time t_{98} in sec.for simple smoothing
SMEM	Memory function	OFF Off SPhd Peak-Hold function S.Atd ATD function

Parameter		Function	Comments
SAtd**		Opening of the lower menu level ATD Function**	
	tdEL	Time delay	See chapter ATD function
	tAct	Sampling time	
	tdiS	Cut-off interval	
	Li.1	Limit 1	
	Li.2	Limit 2	
	tFPr	Weighted average	
	tAno	Display mode	
	toUt	Timeout	
	tFAL	Threshold for plausibility check: lower limit	
	tri S	Threshold for plausibility check: upper limit	
	tL2c	Check, whether threshold 2 is fallen below during the measuring time	See chapter ATD function
	tAUt	Autoreset	
	End	Closing of the lower menu level ATD Function	

Parameter		Function	Comments
SPhd*		Opening of the lower menu level Peak-Hold Function*	
	t, ME	Hold time Peak-Hold function	Time in sec.
	dAP	Damping	Damping
	End	Closing of lower menu level Peak-Hold Function	
StMP		Actual temperature reading	Actual temperature reading
End		End	Exit menu

* Parameter and lower menu level can only be selected with active Peak-Hold Function

** Parameter and lower menu level can only be selected with active ATD function

13.5 Advanced Features (EF)

Parameter		Function	Comments
cAM*		Opening of the lower menu level of the camera	
	c.coul.	Screen insert temperature reading	on off
	c.tbc.	TBC exposure metering	on spot weighted off average
	c.coL	White blance	AUtO. automatic dAYL daylight
	c. id.	Measuring point number	OFF 1 -99 display of the measuring point number in the camera display
	End	Closing of the lower menu level of the camera	
di SP		Process value display	on current temperature value oFF run is shown on the display
Uni t		Temperature unit	Temperature displayed in °C or °F
t.SI n		Temperature Simulation	A temperature can be simulated
i t.		Internal device temperature	The display shows the actual internal device temperature reading
rES		Factory settings	Reset to factory settings
End		End	Reset to factory settings

** Parameter only available for models with camera

14 Parameterizing

When you reset/adjust the operating parameters, the instrument remains in run mode. It continues to operate, using the current parameter settings, until you have finished configuring by pressing [MODE].

14.1 Setting parameters – general information

1	**Select main menu** ▶ Press [MODE] to access the main menu.	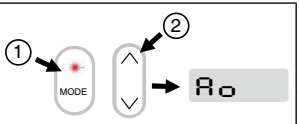
2	▶ Press [∧ oder ∨] until the required output function or advanced features is displayed.	
3	**Select parameter** ▶ Press [MODE].	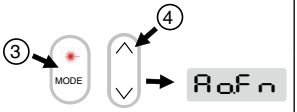
4	▶ Press [∧ or ∨] until the required parameter is displayed	
5	**Change parameter value** ▶ Press [MODE]. > Current parameter value is displayed.	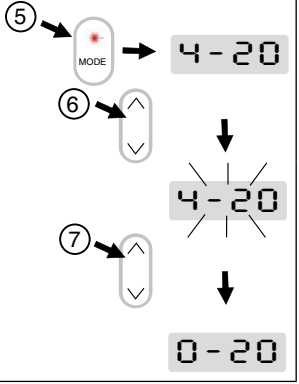
6	▶ Press [∧ or ∨] for 2 second. > >Display flashes three times.	
7	▶ Press [∧ or ∨] to change the parameter. ▶ Hold key [∧ or ∨]. > Numerical values scroll through rapidly.	

8	**Confirm parameter value** ► Press [MODE]. > The display indicates the parameter. The new value has been saved and will take effect.	

Exit operating parameter layer

► Wait 30 seconds

or

► Press [^ or v] to change to the parameter End. Then press [MODE] to change to the functional menu.

► In the functional menu press [^ or v] to change to the parameter End, then press [MODE].

If you press both keys [^ v] only briefly, you will exit the layer (ESC) function.

15 Error indications

Overload switching output	Sc and flashing of the LED Out 1/2
Overtemperature	Display ot and the process value change with 0.5 Hz
Incorrect connection of supply voltage	The display is turned off
Supply voltage ≤ 16 V	The display is turned off
Temperature below mesuring range	The display shows UL
Temperature above measuring range	The display shows OL

16 Service functions

16.1 Reset all parameters to factory settings

▶	[rES] Select extended functions [EF] in the menu
▶	Press [MODE]
>	RES is shown in the display
▶	Press the ∨ key for 2 s
>	RES flashed for 2 s
▶	Release the key ∨ key and press it again
>	– – – – is shown in the display
▶	Press [MODE] button
>	The current temperature is shown in the display

16.2 Simulate a desired temperature

▶	[t.SI n] Select extended functions [EF]
▶	Press [MODE]
>	The display shows the previously set temperature
▶	Press the ∧ key for 2 s
>	Temperature flashes 3 times
▶	Use the keys ∧ ∨ to set the desired temperature, release the key
>	The display alternately shows t.SI n and the temperature value
▶	Press [MODE] button
>	The display shows t.SI n and the simulation is completed

Exit operating parameter layer

▶ Wait 30 seconds

or

▶ Press [∧ or ∨] to change to the parameter End. Then press [MODE] to change to the functional menu.

▶ In the functional menu press [∧ or ∨] to change to the parameter End, then press [MODE].

17 Maintenace

17.1 Cleaning the pyrometer lens

A soiled lens leads to wrong display of the measured value.

- ► Check the lens regularly and clean it, if required.
  - Remove dust by blowing or with a soft brush.
  - Use clean, soft and lint-free cloths or those offered on the market for lens cleaning.
  - For heavier contamination, use washing-up liquid or liquid soap. Then carfully rinse with clear water. Hold the lens downwards.
  - Exert only little preasure on the lens during cleaning to avoid scratches.

17.2 Replacing the protective screen

To protect the pyrometer optics against contamination in harsh industrial environments, an additional protective screen is often used. A contamination of the protective screen also leads to a reduced indication of the measuring value.

- ► Check the protective screen regularly and clean it if necessary or replace it in case of damage.
  - Remove dust by blowing or with a soft brush.
  - Use clean, soft and lint-free cloths or those offered on the market for lens cleaning.
  - For heavier contamination, use washing-up liquid or liquid soap. Then carfully rinse with clear water. Hold the lens downwards.
  - Exert only little preasure on the lens during cleaning to avoid scratches.

⚠ ATTENTION

Replacement of the protection glass only by authorized person. When removing the protective screen, always wear **protective glasses and -gloves.**

18 Models

Pyrometer		
Type	**Temp. range**	**Application**
PX 10	0 - 1000 °C	Non-metals
PX 13	500 - 1300 °C	Flame-heated furnaces
PX 15	300 - 1300 °C 500 - 2500 °C	Glass surfaces
PX 17	500 - 2000 °C	Hot combustion gases (CO_2)
PX 18	500 - 2500 °C	Hot combustion gases
PX 20	210 - 2000 °C 350 - 2500 °C	Metals, ceramics, molten glass
PX 28	75 - 650 °C	Aluminium, metals with shiny surfaces
PX 29	150 - 800 °C 180 - 1200 °C 250 - 2000 °C	Aluminium, metals with shiny surfaces, laser heating
PX 30	500 - 2500 °C	Metals, ceramics at high temperatures
PX 35	600 - 3000 °C	Precise measurement of metals, semiconductors

19 Field of view

With a pyrometer with focusable optics, the size of the measurement field is determined by the distance ratio D. The measurement field diameter d at the focal distance is defined by the formula:

$$d = \frac{a}{D}$$

EN

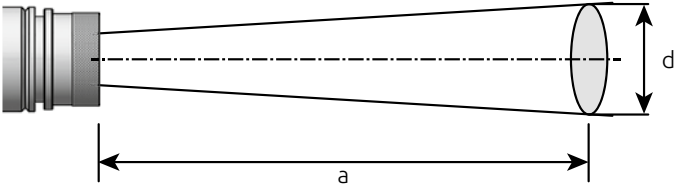

On our website you will find a measurement field calculator. Select the suitable pyrometer, enter the measuring distance and the length of the measurement field and you will get the suitable measurement field course and you can see the size of the measuring spot at the relevant distance.

www.pyrometer.com/en/services/tools/measuring-field-calculator/

20 General technical data

Pyrometer	
Analogue output	0(4) -20 mA linear according NAMUR 43, switchable, scalable load 500 Ω
Switching output OUT1	PNP Open Collector outputs 24 V, ≤ 150 mA switch point [°C]/ return switch point [°C], hysteresis ≥ 1 K, on/switch-off delay, NC/ NO or IO-Link
Switching output OUT2	PNP Open Collector outputs 24 V, ≤ 150 mA switch point [°C]/ return switch point [°C], hysteresis ≥ 1 K, on/switch-off delay, NC/ NO
Ambient temperature	0- 65 °C (without cooling)
IO-Link revision	V1.1, download compatible to V1.01
SIO mode	yes, supported
Transmission rate	COM2 (38.400 Baud)
Storage temperature	-20 – 80 °C
Permissible humidity	95 % r.H. max. (non condensing)
Power supply	24 V DC +10 % / -20 % ripple ≤ 200 mV
Current consumption	≤ 135 mA ≤ 150 mA with laser pilot light ≤ 175 mA with camera
Housing material	Stainless steel
Weight	Approx. 1 kg (according model)
Connectivity	5-pin connection M12 (A coded)
Protection	IP 65 according DIN 40050 with screwed plug
Configuration parameter	Emissivity ε 10 - 110 % Transmissions factor τ 10 - 100 % Smoothing function t_{98} 0.1 – 999.9 s Peak hold function 0.1 – 999.9 s ATD function

Sighting device	Through-the-lens sighting with target marking, laser spot light or integrated camera
Dimensions	Ø 65 x 220 mm (without plug)
Camera (optional)	
Video system	Composite PAL, 1 Vpp, 75 Ohm
Resolution	722 x 576 Pixel
Target brightness control (TBC)	spot weighted or integrated about the camera image
Screen display	Target marker, measurement
Connection	TNC plug

21 Device-specific technical data

PX 10	
Temperature range	0 - 1000 °C
Sensor	Thermopile
Spectral sensitivity	8 -14 µm
Focussing range	0.3 m - ∞ optic PZ 10.01 0.15 - 0.3 m optic PZ 10.05
Distance to target-size ration	50:1 (PZ 10.01) 48:1 (PZ 10.05)
Resolution current output	0.2 K + 0.03 % of selected range
Resolution temp. reading	0,1 K < 200 °C 1 K ≥ 200 °C
Response time t_{98}	≤ 30 ms
Measurement uncertainty	1 % of temperature reading, minimum 2 K, (at ε =1.0 and Tu = 23 °C)
Repeatability	1 K
Temperature coefficient with reference to 23°C	≤ 0.1 K / K (for T < 250 °C) ≤ 0.04 %/K (for T ≥ 250 °C) of temperature reading / K

PX 13	
Temperature range	500 -1600 °C
Sensor	Thermopile
Spectral sensitivity	3.9 µm
Focussing range	0.8 m - ∞ optic PZ 15.03
Distance to target-size ration	45:1 (PZ 15.03)
Resolution current output	0.2 K + 0.03 % of selected range
Resolution temp. reading	1 K
Response time t_{98}	≤ 100 ms
Measurement uncertainty	1 % of temperature reading (at ε =1.0 and Tu = 23 °C)
Repeatability	2 K
Temperature coefficient with reference to 23°C	≤ 0.04 %/K of temp. reading / K

PX 15	
Temperature range	500 - 2500 °C (AF 1) 300 - 1300 °C (AF 2)
Sensor	Thermopile
Spectral sensitivity	4.6 - 4.9 µm
Focussing range	0.8 m - ∞ optic PZ 15.03
Distance to target-size ration	70:1 (PZ 15.03, AF 1) 45:1 (PZ 15.03, AF 2)
Resolution current output	0.2 K + 0.03 % of selected range
Resolution temp. reading	1 K
Response time t_{98}	≤ 100 ms
Measurement uncertainty	0.75 % of temperature reading, minimum 3 K (at ε =1.0 and Tu = 23 °C)
Repeatability	2 K
Temperature coefficient with reference to 23°C	≤ 0.04 %/K of temp. reading / K

PX 17	
Temperature range	400 - 2000 °C
Sensor	Thermopile
Spectral sensitivity	CO_2 band
Focussing range	0.8 m - ∞ optic PZ 15.03
Distance to target-size ration	75:1 (PZ 15.03)
Resolution current output	0.2 K + 0.03 % of selected range
Resolution temp. reading	1 K
Response time t_{98}	≤ 100 ms
Measurement uncertainty	0.75 % of measuring value + 1 K (at ε =1.0 and Tu = 23 °C)
Repeatability	2 K
Temperature coefficient with reference to 23°C	≤ 0.04 %/K of temp. reading / K

PX 18	
Temperature range	500 - 2500 °C
Sensor	Thermopile
Spectral sensitivity	CO band
Focussing range	0.8 m - ∞ optic PZ 15.03
Distance to target-size ration	70:1 (PZ 15.03)
Resolution current output	0.2 K + 0.03 % of selected range
Resolution temp. reading	1 K
Response time t_{98}	≤ 100 ms
Measurement uncertainty	0.75 % of temperature reading, minimum 3 K (at ε =1.0 and Tu = 23 °C)
Repeatability	2 K
Temperature coefficient with reference to 23°C	≤ 0.04 %/K of temp. reading / K

PX 20	
Temperature range	210 - 2000 °C (AF 1, AF 2, AF 3, AF 4, AF 9) 350 - 2500 °C (AF 5, AF 6, AF 7, AF 8, AF 11)
Sensor	Photodiode
Spectral sensitivity	1.1 - 1.7 µm
Focussing range	0.4 m - ∞ optic PZ 20.01 0.2 - 0,4 m optic PZ 20.03 1.2 m - ∞ optic PZ 20.06 0.2 m - ∞ optic PZ 20.05 0.6 m - ∞ optic PA 20.06
Distance to target-size ration	175:1 (PZ 20.01, AF 1, AF 5) 150:1 (PZ 20.03, AF 2, AF 6) 275:1 (PZ 20.06, AF 3, AF 7) 40:1 (PZ 20.05, AF 4, AF 8) 380:1 (PA 20.06, AF 9, AF 11)
Resolution current output	0.2 K + 0.03 % of selected range
Resolution temp. reading	1 K
Response time t_{98}	≤ 50 ms (T > 210 °C) ≤ 2 ms (T > 750 °C)
Measurement uncertainty	0.3 % of temperature reading, minimum 4 K (at ε =1.0 and Tu = 23 °C)
Repeatability	1 K
Temperature coefficient with reference to 23°C	0.25 K/K (T < 500 °C) 0.05 %/K (T > 500 °C) of temp. reading / K

PX 28	
Temperature range	75 - 650 °C
Sensor	Photodiode
Spectral sensitivity	1.8 - 2.4 µm
Focussing range	0.3 m - ∞ optic PZ 20.08
Distance to target-size ration	48:1 (PZ 20.08)
Resolution current output	0.2 K + 0.03 % of selected range
Resolution temp. reading	0,1 K < 200 °C 1 K ≥ 200 °C
Response time t_{98}	≤ 200 ms (T > 75 °C) ≤ 50 ms (T > 100 °C) ≤ 15 ms (T > 125 °C) ≤ 2 ms (T > 200 °C)
Measurement uncertainty	0.75 % of temperature reading, minimum 3 K (at ε =1.0 and Tu = 23 °C)
Repeatability	1 K
Temperature coefficient with reference to 23°C	0.25 K/K (T < 500 °C) 0.05 %/K (T > 500 °C) of temp. reading / K

PX 29	
Temperature range	250 - 2000 °C (AF 1, AF 2, AF 3, AF 4) 150 - 800 °C (AF 10) 180 - 1200 °C (AF 21, AF 22, AF 23)
Sensor	Photodiode
Spectral sensitivity	1.8 - 2.2 µm
Focussing range	0.4 m - ∞ optic PZ 20.01 0.2 - 0.4 m optic PZ 20.03 1.2 m - ∞ optic PZ 20.06 0.2 m - ∞ optic PZ 20.05 0.3 m - ∞ optic PZ 20.08
Distance to target-size ration	210:1 (PZ 20.01, AF 1) 200:1 (PZ 20.03, AF 2) 310:1 (PZ 20.06, AF 3) 55:1 (PZ 20.05, AF 4) 48:1 (PZ 20.08, AF 10) 60:1 (PZ 20.01, AF 21) 56:1 (PZ 20.03, AF 22) 96:1 (PZ 20.06, AF 23)
Resolution current output	0.2 K + 0.03 % of selected range
Resolution temp. reading	Temperature range 150 - 800 °C and 180 - 1200 °C: 0.1 K < 200 °C 1 K ≥ 200 °C Temperature range 250 - 2000 °C: 1 K

PX 29	
Response time t_{98}	Temperature range 150 - 800 °C: ≤ 50 ms (T > 150 °C) ≤ 15 ms (T > 200 °C) ≤ 2 ms (T > 350 °C) Temperature range 180 - 1200 °C: ≤ 75 ms (T > 180 °C) ≤ 35 ms (T > 200 °C) ≤ 5 ms (T > 300 °C) ≤ 2 ms (T > 600 °C) Temperature range 250 - 2000 °C: ≤ 50 ms (T > 250 °C) ≤ 2 ms (T > 750 °C)
Measurement uncertainty	Temperature range 150 - 800 °C and 180 - 1200 °C: 0.75 % of temperature reading, minimum 5 K Temperature range 250 - 2000 °C: 0.5 % of temperature reading, minimum. 4 K (at ε =1.0 and Tu = 23 °C)
Repeatability	1 K
Temperature coefficient with reference to 23°C	0.25 K/K (T < 500 °C) 0.05 %/K (T > 500 °C) of temp. reading / K

PX 30	
Temperature range	500 - 2500 °C
Sensor	Photodiode
Spectral sensitivity	0.78 - 1.06 µm
Focussing range	0.4 m - ∞ optic PZ 20.01 0.2 - 0.4 m optic PZ 20.03 1.2 m - ∞ optic PZ 20.06 0.2 m - ∞ optic PZ 20.05 0.6 m - ∞ optic PA 20.06
Distance to target-size ration	210:1 (PZ 20.01, AF 1) 200:1 (PZ 20.03, AF 2) 310:1 (PZ 20.06, AF 3) 55:1 (PZ 20.05, AF 4) 430:1 (PA 20.06, AF 5)
Resolution current output	0.2 K + 0.03 % of selected range
Resolution temp. reading	1 K
Response time t_{98}	≤ 50 ms (T > 550 °C) ≤ 2 ms (T > 750 °C)
Measurement uncertainty	0.3 % of temperature reading, minimum 4 K (at ε =1.0 and Tu = 23 °C)
Repeatability	1 K
Temperature coefficient with reference to 23°C	0.05 %/K of temp. reading / K

PX 35	
Temperature range	600 - 3000 °C
Sensor	Photodiode
Spectral sensitivity	0.82 - 0.93 µm
Focussing range	0.4 m - ∞ optic PZ 20.01 0.2 - 0.4 m optic PZ 20.03 1.2 m - ∞ optic PZ 20.06 0.2 m - ∞ optic PZ 20.05 0.6 m - ∞ optic PA 20.06
Distance to target-size ration	210:1 (PZ 20.01, AF 1) 200:1 (PZ 20.03, AF 2) 310:1 (PZ 20.06, AF 3) 55:1 (PZ 20.05, AF 4) 430:1 (PA 20.06, AF 5)
Resolution current output	0.2 K + 0.03 % of selected range
Resolution temp. reading	1 K
Response time t_{98}	≤ 50 ms (T > 650 °C) ≤ 2 ms (T > 850 °C)
Measurement uncertainty	0.3 % of temperature reading, minimum 4 K (at ε =1.0 and Tu = 23 °C)
Repeatability	1 K
Temperature coefficient with reference to 23°C	0.05 %/K of temp. reading / K

22 Field of view camera

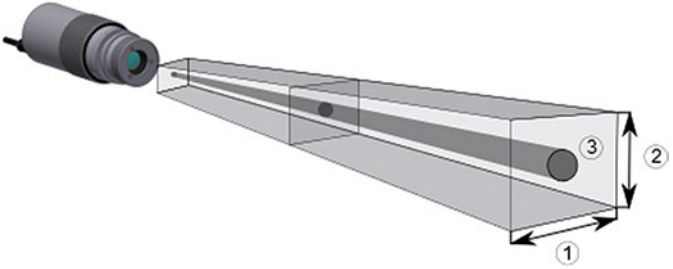

EN

1	Horizontal extent of the visual filed HFOV
2	Vertical extent of the visual filed VFOV
3	Field of view pyrometer

Optics	PZ 20.01		PZ 20.03		PZ 20.06	
Measuring distance [m]	HFOV [mm]	VFOV [mm]	HFOV [mm]	VFOV [mm]	HFOV [mm]	VFOV [mm]
0.2			8.5	6.4		
0.3			14	11		
0.4	16	12	20	15		
1	45	34				
1.2	54	41			33	24
2	92.7	70			56	42
3	140	105			86	65
4	188	141			116	87
5	236	177			146	110
6	284	213			176	132
7	332	249			206	154
8	379	285			236	177
9	427	320			266	199
10	475	356			295	222

Optics	PZ 20.05		PZ 20.08	
Measuring distance [m]	HFOV [mm]	VFOV [mm]	HFOV [mm]	VFOV [mm]
0.2	41.7	31.3		
0.3			20	15
0.4	79.4	59.6	27	20
1	193	144	70	52
1.2	230	173	84	63
2	381	286	142	106
3	570	427	213	160
4	759	569	285	214
5	947	710	357	267
6	1136	852	428	321
7	1324	993	500	375
8	1513	1135	572	429
9	1702	1276	643	482
10	1890	1418	715	536

23 Accessories

A range of mechanical and electrical accessories are available for mounting the pyrometers in industrial environments.

For the selection of the components use the following link:

www.pyrometer.com/en/products/accessories/

24 Default settings

The default settings can be found in the descriptions of the IODD.
You can find them on the respective device pages on our homepage www.pyrometer.com/en/products/pyrometer/

25 Copyright

The licence information of the Open Source libraries used can be found in the media center on our homepage www.pyrometer.com

Copyright prohibits the reproduction or distribution of this instruction manual, including text, photographs or images contained herein, in whole or in part, for any purpose whatsoever, without prior consent of the author. This applies to any form of mechanical or electronic reproduction as well as to electronic transmission in any form through any medium.

Please note:

Unless otherwise stated in this instruction manual, the instruments described herein are subject to change without prior notice, particularly modifications for the sake of technological advancement.

© Keller HCW GmbH

Keller

>>> Pyrometer Systems

Keller HCW GmbH | Pyrometer Systems
Carl-Keller-Str. 2-10 | 49479 Ibbenbüren | Germany
pyrometer.com

TÜVNORD
TÜV NORD CERT GmbH
DIN EN ISO 9001
DIN EN ISO 14001
DIN EN ISO 50001
tuev-nord.de